Series PCHP Pneumatic Calibration Hand Pump

Specifications - Installation and Operating Instructions

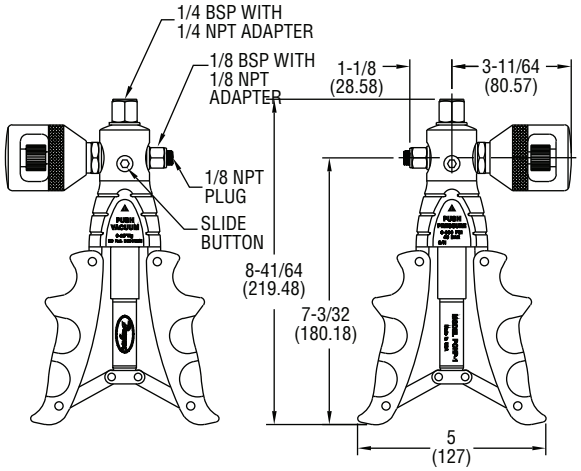

The Series PCHP Pneumatic Hand Pump comfortably sources pressure and vacuum to check calibration of gages, switches, transmitters, and recorders. The contoured cushion handles provide extra comfort while preventing the pump from sliding. The oversized check valve provides smooth operation throughout the output range. The dual o-rings on all pistons ensure zero leakage.

OPERATION

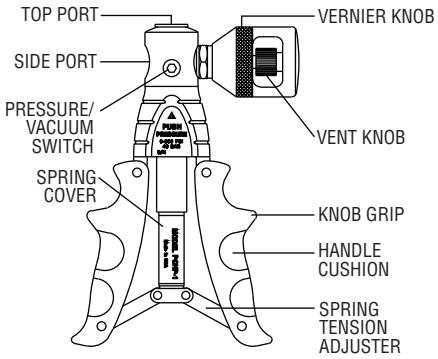

Fig. 1

Insure all gauges and instruments to be calibrated are disconnected from process pressures before connecting the pump. The maximum pump design pressure is 600 psig. Connection to a pressure sources greater than 600 psig could cause serious injury.

Fittings

The pump is equipped with 1/8″ and 1/4″ BSP ports. In order to use NPT fittings, a NPT to BSP Parallel Thread Adapter is required. These adapters, which are included with the pump, have a bonded washer attached to the male end of the adapter.

CAUTION! Do not use thread sealant paste or tape to seal the adapters to the pump. Do not over tighten adapters.

The pump uses a Schrader valve instead of a needle valve. Thus, full open or closed is several turns from the end of the travel. Overtightening does not increase the seal.

SPECIFICATIONS

Media: Air and compatible gases only.
Output Ranges: -28″ Hg to 600 psi (-0.945 to 40 bar).
Process Connection: 1/4″ NPT/BSP.
Gauge Connection: 1/8″ NPT/BSP.
Materials: Stainless steel fittings, anodized aluminum housing, plastic/rubber handles, and nitrile o-rings.
Weight: 2 lbs (0.91 kg).

Volume Control

The pump is equipped with two knobs for fine adjustment of the system pressure. The vent knob can be used to slowly reduce the system pressure. The vent knob should be closed prior to pressurizing the system by turning the knob away from the pump housing. The Vernier knob can be used to increase or decrease the system at a more controlled rate. For fast relieve of the pressure, move the pressure/vacuum pin to the opposite direction.

Over Pressure Protection

For a maximum pressure of 600 psi, the handles should be 3/4″ apart at the closest point. To reduce the maximum pressure, adjust the spring tension via the hex nut at the bottom of the main shaft between the handles. The closer the handles are to each other, the lower the amount of pressure that will be able to be generated.

Pressure/Vacuum Selector

The pump can be used to generate pressure or vacuum depending on the position of the pin located in the pressure/vacuum switch. Press the pin on the side of the pump housing according to labels for the desired operation.

For High Pressure Operation

Prior to pressurizing, back out the Vernier knob until the ring on the Vernier shaft is showing. Pump to pressurize. Turn the Vernier knob towards the pump housing and the pressure should easily be able to reach 600 psi.

MAINTENANCE

Upon final installation of the Series PCHP Pneumatic Calibration Hand Pump, no routine maintenance is required. A periodic check of system calibration is recommended. The Series PCHP is not field serviceable and should be returned if repair is needed (field repair should not be attempted and may void warranty). Be sure to include a brief description of the problem plus any relevant application notes. Contact customer service to receive a return goods authorization number before shipping.

PVN ENGINEERING CO.,LTD | Hotline : 095-365-8531 | Email : marketing@pvn.co.th